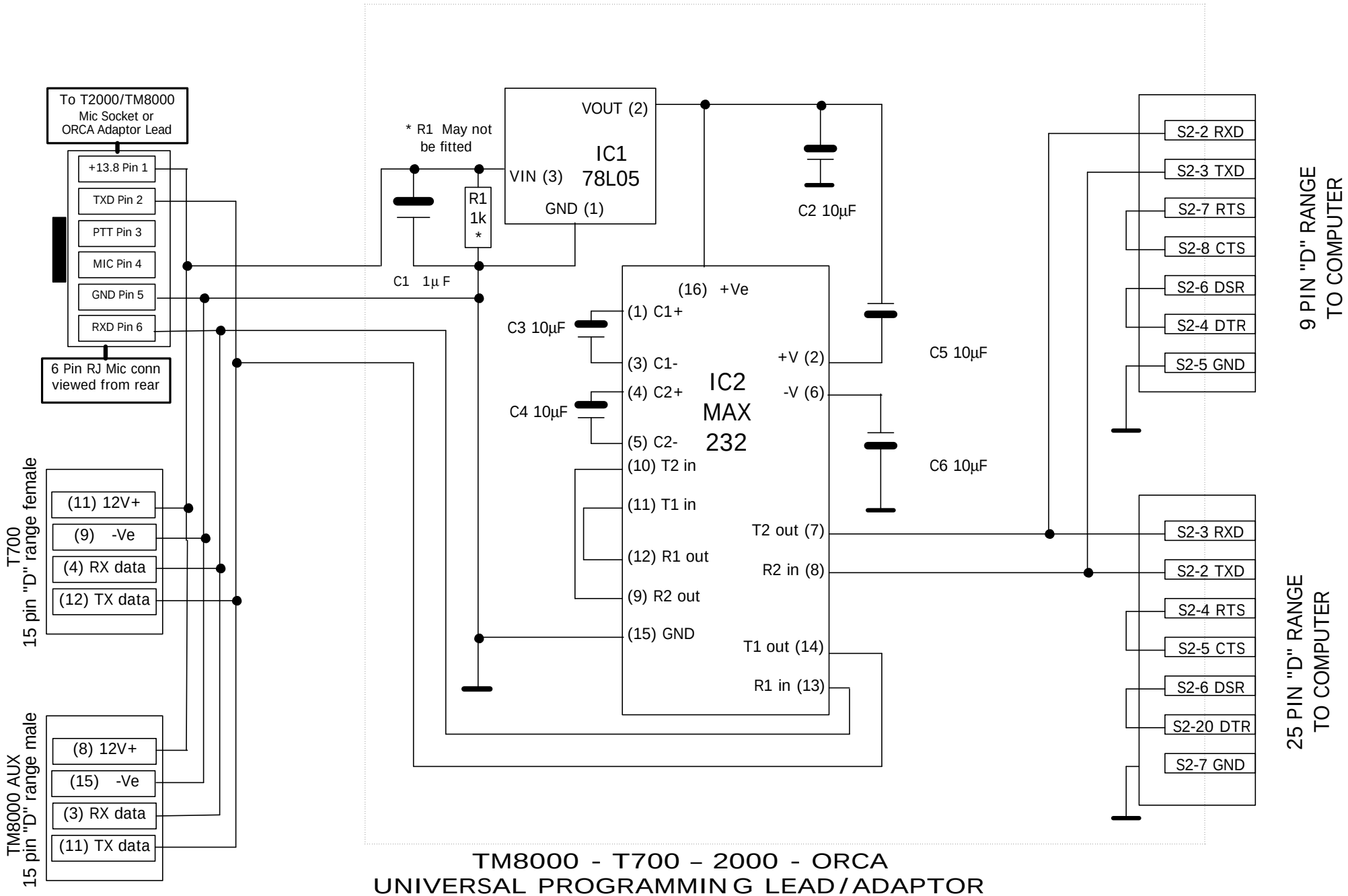


TM8000 - T700 – 2000 - ORCA
UNIVERSAL PROGRAMMIN G LEAD/ADAPTOR

PROGRAMMING LEAD CCT

new01.doc